www.ocem.com
ocem@ocem.com

LED FLASHING SYSTEM FOR APPROACH, REIL, CGL

INSTRUCTION MANUAL FOR USE AND MAINTENANCE

Document name	UT-MT-0893_EN
Edition	01/08/2018
Edited by	ALAN, EBER, MCAS
Checked by	MMAZ

OCEM AirfieldTechnology

Via della Solidarietà, 2/1
40056 Valsamoggia, Loc. Crespellano
Bologna - ITALY

INDEX

INDEX OF FIGURES

1 INTRODUCTION

1.1 Safety Instructions

The following section contains important safety information that you must follow when install, use and repair the apparatus.
To a proper and safe use of the apparatus:

- Refer to IEC 61821 (Electrical installations for lighting and beaconing of aerodromes - Maintenance of aeronautical ground lighting circuits) for safety precaution;
- Observe precaution for low voltage equipment (230VAC);
- Do not carry out any installation or maintenance operation on apparatus connected to energized circuits. Remove power supply to avoid contact with voltage or current sources;
- For no reason the protections and the safety devices must be removed;
- Read safety instruction for all used equipment and follow the safety instructions of your company, government or other regulatory agencies.

 WARNING	Different use of the apparatus than described in this manual may result in personal injury, death, or property and equipment damage. Use the apparatus only as described in the manual.

 MANUALS	Before installation or maintenance read carefully the apparatus manuals.

 PERSONNEL	Only qualified personnel should operate on the apparatus. The qualified personnel must be physically capable and well informed and trained on the risks related to the electricity and low voltage apparatus. During any operation on apparatus, cables or other equipment, the personnel should respect the safety rules. The maintenance staff must be aware of the criteria to prevent the risk of electric shock and resuscitation techniques.

 WARNING	Before any access, inspection or intervention be sure to have switched-off the system. It is also recommended to remove the power supply to the system (by opening the circuit breaker/switch in the main distribution board feeding the Flash Master Control Unit). Then wait discharge time (at least 5 minutes), ground carefully the system, and check for voltage presence before accessing.

During the installation or maintenance operations on the apparatus:

- Follow the general safety rules;
- Make sure that environmental conditions, means of transports or animals will not damage the electrical system;
- Don't touch energized voltage or current sources;
- Pay attention when operate with electrical equipment in presence of high humidity environment
- Use unapproved equipment will void the warranty.

In case of removal of safety device, restore them as soon as possible.
Do not operate on the apparatus if it is not working properly or alarms are enable.
For maintenance, use only approved spare parts; using unapproved or modified spare parts may create safety hazards and invalidate the warranty.

CE MARK	This equipment complies with the requirements of European regulations for the CE mark. The user has to respect all prescriptions reported in this document. This equipment complies with the requirements of the EEC directives 2004/108/EEC and 2006/95/EEC with regard to "Electromagnetic Compatibility" and "Low Voltage Electrical Apparatus" respectively.

OUT OF SERVICE

In case of dismantling, decommissioning, destruction, disposal, the user shall follow all the required precautions for component and material elimination, according to local rules and applicable law.

1.2 Icons used in the manual

	GENERAL DANGER
	ELECTRIC DISCHARGES
	DO NOT INTERVENE MANUALLY
	READ THE ATTACHED DOCUMENTATION
	AUTHORIZED PERSONNEL ONLY
	CE MARK
	ADDITIONAL INFORMATION
	QUALIFIED TECHNICIAN

	ELECTRICALLY DISCONNECT BEFORE CARRYING OUT WORK OR REPAIRS
	GENERAL OBBLIGATION

1.3 Abbreviations and terms

LED	Light Emitting Diode
ICAO	International Civil Aviation Organization
EASA	European Aviation Safety Agency
PMMA	Polymethylmethacrylate
CCR	Constant Current Regulator
FAA	Federal Aviation Administration
FMCU	Flash Master Control Unit
FFU	Flash Field Unit

2 DESCRIPTION

2.1 Applications and compliances

The LED Flashing System can be used as:

- Approach Sequential Flash Light (SFL);
- Runway Threshold Identification Light (RTIL);
- Circling Guidance Light (CGL);
- A combination of two or three parts mentioned above, managed by a single FMCU (that have to flash in a coordinated manner and at the same frequency).

The Flashing System is compliant to:

- ICAO Annex 14 Vol.1;
- ICAO doc 9157 - Aerodrome Design Manual - Parts: 4, 5 and 6;
- EASA CS-ADR-DSN;
- FAA Engineering Brief No67;
- IEC TS 61827;
- NATO-STANAG 3316;
- CASA MOS 139;

2.2 LED Flashing System overview

Typically, the LED Flashing System is composed by:

- Nr. 1 Flash Master Control Unit (FMCU), including a Touch Pad for local HMI and an interface to remote system (ALCMS);
- Nr. *N* Flash Field Units (FFU);
- Nr. *N* elevated/inset light fixture (one fixture for each FFU);

In addition, some accessories can be ordered (separately):

- Connectors to realize electrical junctions;
- Other installation equipment (frangible couplings, poles, shallow bases, etc.).

2.2.1 Flash Master Control Unit FMCU

The **FMCU** is the interface between the control system and the Flashing System. Its main functions consist in supplying power to the flashing units on the field and in controlling and monitoring the entire system.
The FMCU communicate through a **Power line communication** to the Flashing System (all the FFUs) for the following functions:

- Control and monitoring the Flashing System from both local interface (Touch Pad) and remote system (ALCMS);
- Regulate the Flashing System parameters, as brightness level and flashing frequency of the light fixtures;
- Synchronize all the FFU;
- Receive diagnostic information as LED status, faults etc. from each Flash Field Unit (FFU).

FMCU characteristics:

- Power supply: Single Phase, 230 VAC (+/-10%), 50-60 Hz;
- IP Class: IP43
- Electrical Protection: Input and Output Circuit Breaker
- Environment Temperature: -10°C to +50°C
- Installation: Metal Housing Wall Mounted
- Humidity (not condensed): 20-90%
- Max Altitude: 2500 m
- Dimensions: 50 x 30 x 25 cm
- Weight: 15 kg

FMCU front external components:

1. Touch Pad. A wrist-strap (**W**) has been included to prevent electrostatic discharge during the use of the Touch Pad);
2. "P-OK" and "P-ON" LED indicators;
3. "Q1" and "Q2", input and output circuit breakers.

FMCU interfaces (bottom side):

4. Power supply (LINE-IN) (230 VAC);
5. J1 four poles female connector for service cable to configure a single FFU;
6. J2 RJ45 female Ethernet port for remote control connection (ALCMS);
7. A small protective vent for air recirculation;
8. Output voltage (LINE-OUT) cable gland (to Flash Field Units and flashing lights, 230Vac);

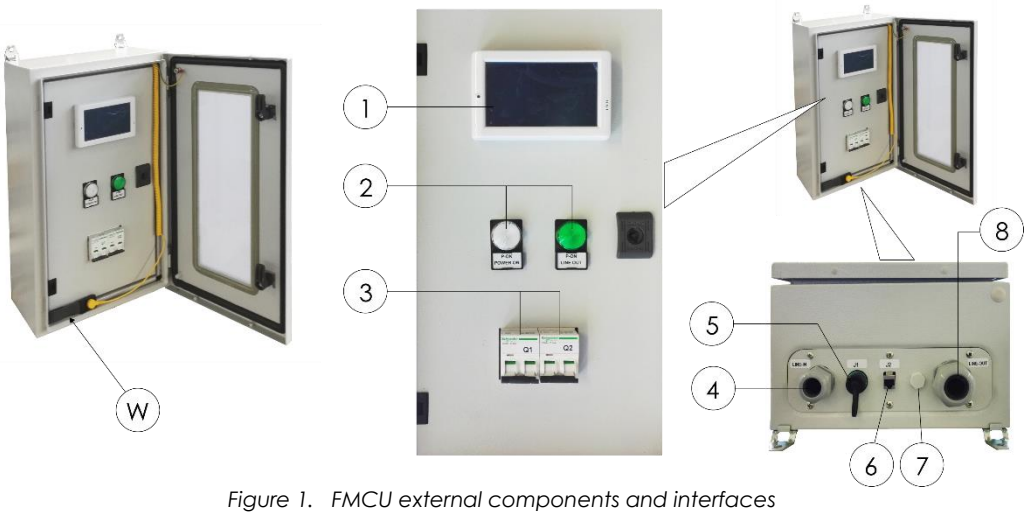

Figure 1. FMCU external components and interfaces

FMCU internal components:

- OCEM Master board (F316);
- Inductor L1 and OCEM Input Filter Board (F340);
- X1 and X2 Input & Output terminal board;
- Q1 and Q2 Input & Output circuit breakers (one to protect the power supply line and one to protect the FMCU in case of short circuit or overcurrent events);
- Fuses F1 and F2 (to protect against short circuits inside the auxiliary power supply)
- Fuse F3 (to protect the panel board against short-circuit of LED "P-ON" light)
- Fuses F4 and F5 (to protect the panel board against short-circuit in the J1 / Service Cable / FFU under programming)
- T1 and T2 power supply (to feed the Touch Pad and the Master board).

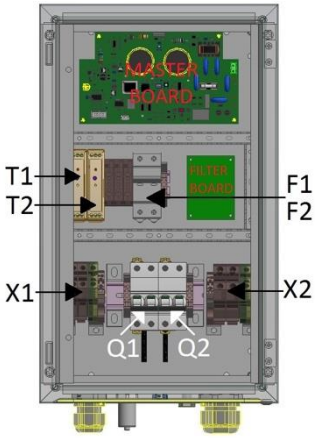

WARNING	The circuit breaker is not equipped with differential protection. It is customer responsibility to provide this protection in the main power supply line energizing the regulator.

2.2.2 Touch Pad

The Touch Pad is a touch screen interface, located in the FMCU cabinet. The main functions of the Touch Pad are:

- setting up the configuration parameter of the Flashing System directly from the FMCU;
- providing commands to the Flashing System;
- installing and de-installing new FFU units;
- providing diagnostic information about every flashing unit on the field.

Touch Pad Rear Description

1. Ethernet
2. RS-485
3. Rotary Switch
   - Position 0 (normal usage mode): Run
   - Position 1: Update OS
   - Position 9: Update AP
4. Micro USB

Figure 2. Touch Pad rear description

2.2.3 Flash Field Unit (FFU)

The main Flash Field Unit (FFU) functions are:

- Receiving and executing commands from the FMCU;
- Supplying power to the associate elevated/inset light fixture;
- Provide diagnostic information (LED status, faults etc.) to the FMCU.

FFU characteristics:

- Power supply (from FMCU): Single Phase, 230 VAC(+/-10%), 50-60 Hz
- IP Class: IP67
- Environment Temperature: -40°C to +55°C
- Max. Altitude: 2500 m
- Dimensions: 22 x 25 x 12 cm

2.2.4 Inset light fixture LIFL

The **LIFL** fixture is a 12'' inset LED flash light, unidirectional steady burning type.
Each light assembly installed in the field consists of a removable fixture and a shallow base receptacle (separately provided). The fixture is waterproof and designed to withstand aircraft impact and rollover loads without damage.

1. Dome with prisms and gaskets;
2. O-Ring for dome (external);
3. O-Ring for dome (internal);
4. O-Ring for lower cover;
5. Reflector;
6. LED module;
7. Lower cover with electronic, plug and valve;
8. Valve for water tightness test;
9. FAA L-823 plug;
10. Prism Gasket;
11. Prism;
12. Prism holder gasket;
13. Mounting plate;

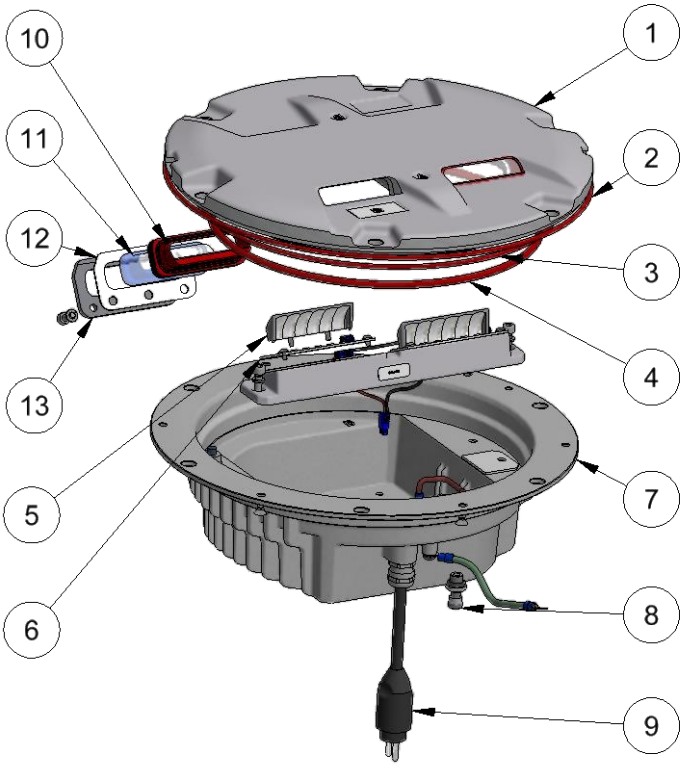

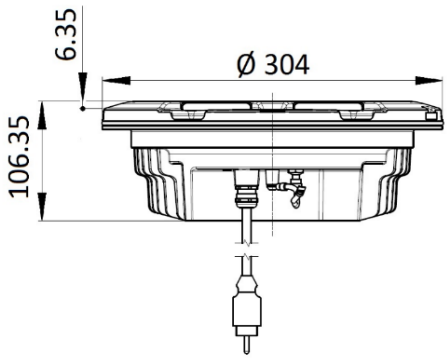

Figure 3. LIFL exploded view

2.2.5 Elevated light fixture LEFL

The **LEFL** fixture is an elevated LED flash light, unidirectional steady burning type.

Each light assembly consists of a body balanced on a special support for proper and accurate horizontal and vertical aiming. The support allows the direct mounting on the breakable coupling or on the top of 60 mm dia supporting pole.

1. Cover
2. Cover gasket
3. LED module support
4. LED module support gasket
5. LED module
6. Lens array for LED module
7. Body
8. Transparent front protection gasket
9. Transparent front protection
10. Transparent front protection holder plate (painted white)
11. Vertical aiming adjusting device
12. Special support
13. Power connector
14. Electronic interface

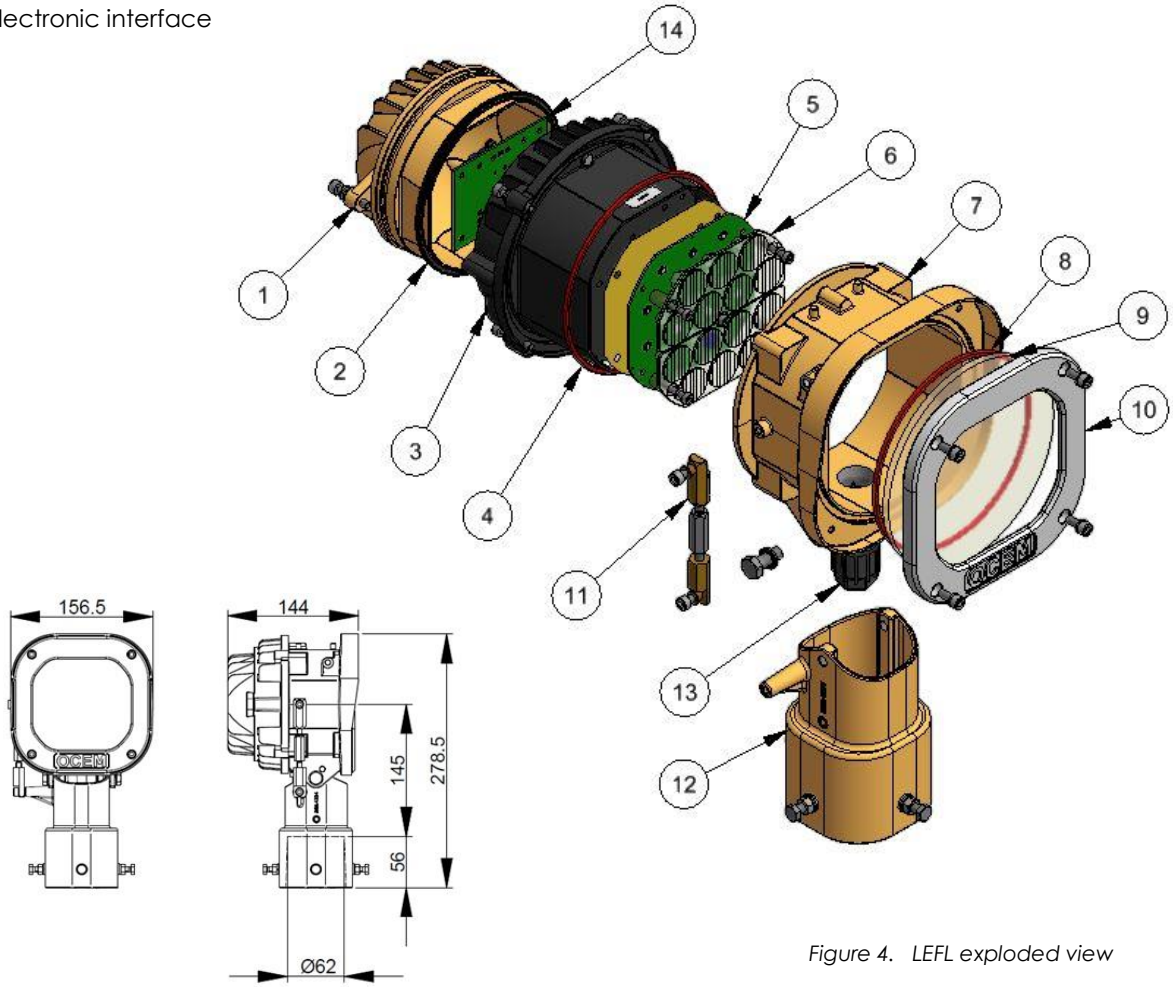

Figure 4. LEFL exploded view

2.2.6 Installation

NOTE	For detailed information about the installation of the Flashing System on the field, see the OCEM UT-MT-0892 Installation Manual.

3 USE OF THE SYSTEM

The LED Flashing System is provided with some pre-configured options that can be changed after the installation. The following paragraphs describe how to configure and use the system.

3.1 Touch Pad Main Page

WARNING	Every time the operator uses the Touch Pad, he have to wear the wrist-strap against electrical discharge that can be provided to the panel.

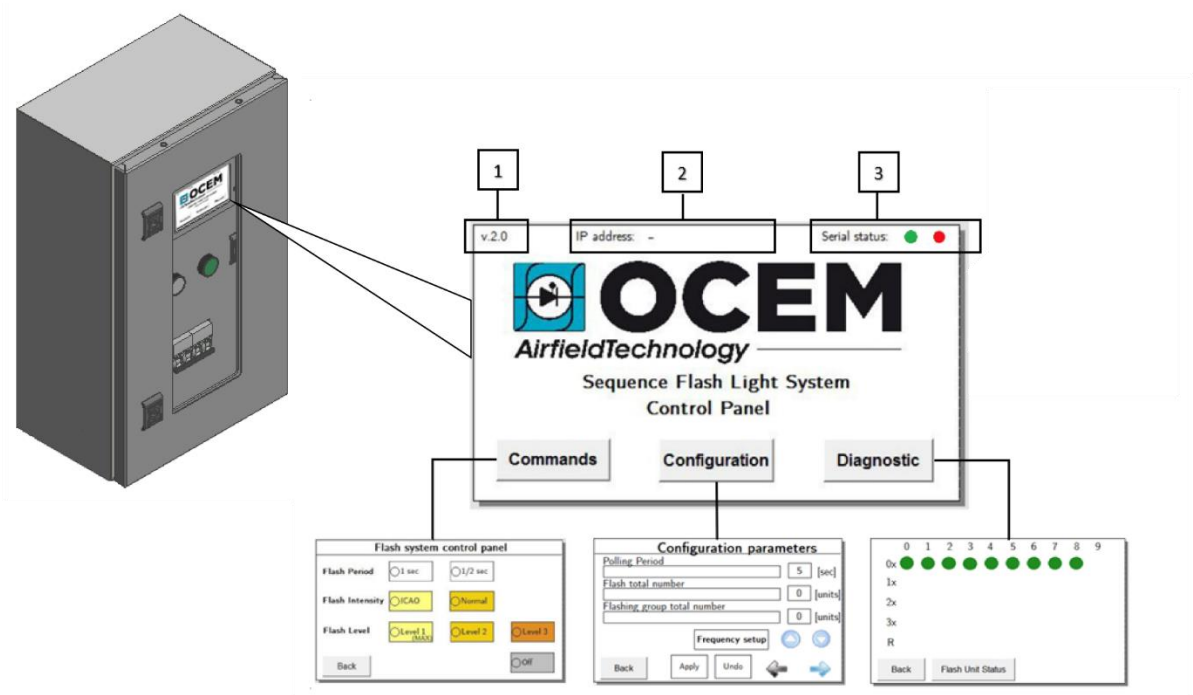

1. Software version;
2. IP Address: the device is based on Modbus/TCP protocol. To set IP Address see the paragraph 3.2.2.
3. Serial Status: it reports the state of communication between the Touch Pad and the master board based on RS-485 protocol
    - Green light indicates that the communication is established;
    - Red light indicates a problem in the communication.

3.2 Configuration

INFO	The following setting procedure shall be done before the configuration of a new FFUs. This operation is typically performed in the factory and the FFUs are provided as already configured. In this case all the FFUs are labelled according their IDs, groups and position in the flashing sequence.

INFO	After the first configuration of the FFUs, every time the parameters are changed, the new configuration values are automatically distributed to all the FFUs connected to the system.

3.2.1 Configuration Parameters

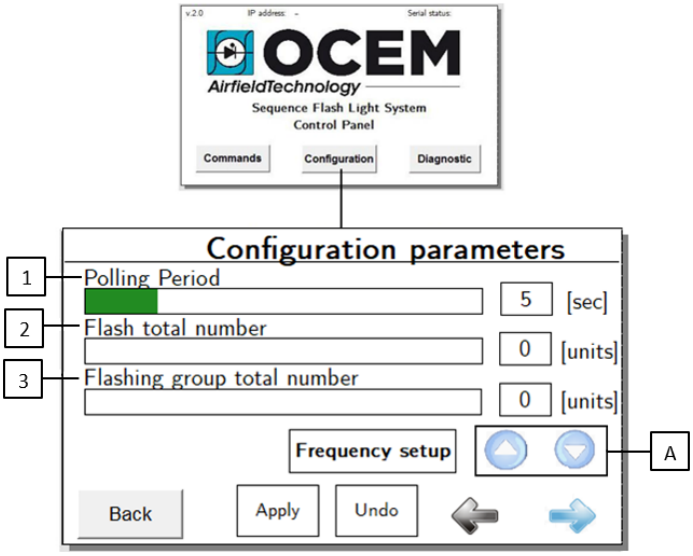

1. Polling Period: time interval in seconds between two requests of FFU status from the Touch Pad to the Master board. The Master reports:

- If the units are working correctly;
- If there are active warnings;
- If the units are correctly calibrated;
- If the units are correctly configured.

To change the value: press at the corresponding bar and swipe with the finger.
For more precise adjustment, press on the bar and then uses the UP/DOWN button (**A**). Polling Period is defined in the range 5 – 240 sec.
Press "Apply" to confirm the changes; press "Undo" to cancel the changes.

2. Flash Total Number: total number of FFU of the system. Change as described in 1, so press "Apply" or "Undo". The maximum possible value is 64.
3. Flashing Group Total Number: indicates how many groups of simultaneously flashing units are present. Clearly, this value cannot be greater than the flash total number. Change as described in 1, so press "Apply" or "Undo";

4. Frequency Setup: indicates the frequency of the main power supply line of the system. Select the frequency in Hz used in the country of installation (50Hz or 60Hz). Press "Apply" to confirm the selection; press "Back" to return to the configuration view.

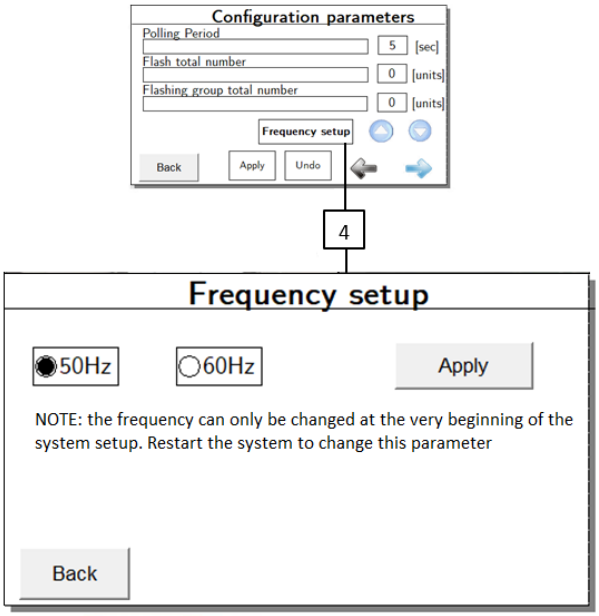

By pressing the right arrow, the frame for the installation of a new FFU appears on the Touch Pad.

5. Flash unit's ID: ID of the FFU;
6. Unit's flashing group; indicates the group of lights to which the unit ID belongs;
7. Normal: select "Normal" to install a simple FFU;
8. Repeater (no light): select "Repeater (no light)" to install an FFU box without any associated flashing fixture. This configuration can be beneficial in case of long cable distances between the FMCU and the first FFU of the chain;
9. Repeater: select "Repeater" to install an FFU used also as SMART repeater for some kind of messages;

After the installation of a repeater FFU (with or without associated flashing light), the buttons (7), (8), and (9) are disabled and they cannot be selected for other FFUs. In fact, it is possible to configure only one FFU as a repeater within the system. To unlock the buttons and select another FFU as a repeater, the current repeater must be first uninstalled.

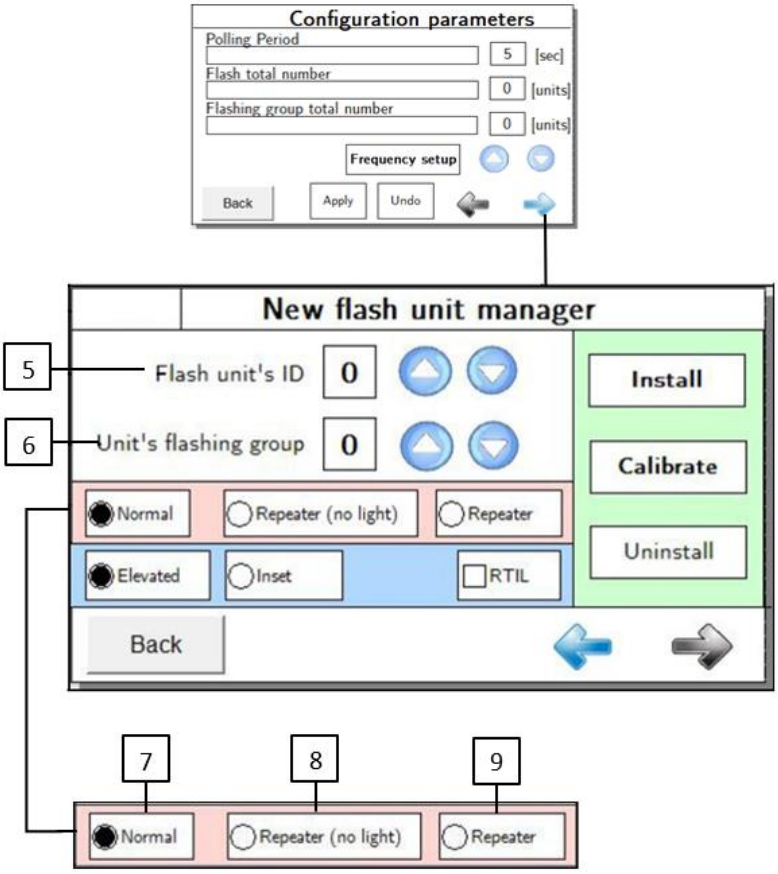

10. Elevated: select "Elevated" to install an FFU associated to an elevated light fixture;
11. Inset: select "Inset" to install an FFU associated to an inset light fixture;
12. RTIL: flag "RTIL" box to install a RTIL FFU;

    Units set as RTIL flash simultaneously. In case of failure of one RTIL light, all the units marked as RTIL will switch off to guarantee consistency of visual information, according to ICAO requirements. If the RTIL box is checked, the "Unit's flashing group" box changes color, to highlight that the RTIL group must be unique within the system.

13. Install: after all the parameters are set for the considered FFU, pressing the button the installation starts;
14. Calibrate: when the color is orange, indicates that a calibration is in progress. When the color is green, indicates that the calibration is successfully completed;
15. Uninstall: uninstall an FFU already installed.

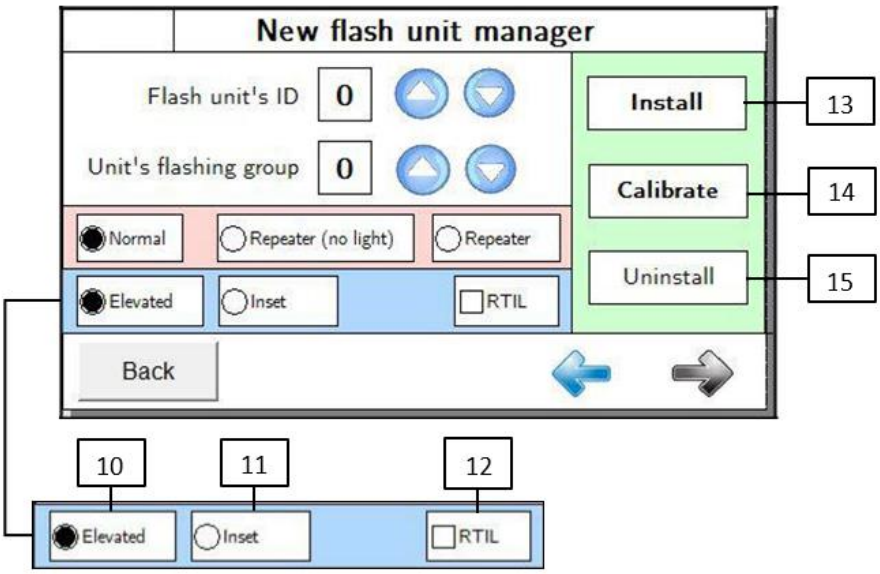

3.2.2 How to modify IP Address

To change the IP Address, follow the steps described below:

1. From the main page, click on the IP Address (A)
2. In the new page, click on the empty spaces (B) or (C) to select one of them
3. Use the numeric keypad to write the new IP Address
4. Press Reset (D) to erase the content of the two cell (B) and (C)
5. Press Back (E) to return to the main page or Confirm (F) to confirm the new IP Address

When the new IP Address is set, all the buttons in the page are disabled and the message (G) appears.
It is necessary to power off and restart the FMCU to apply the modification.

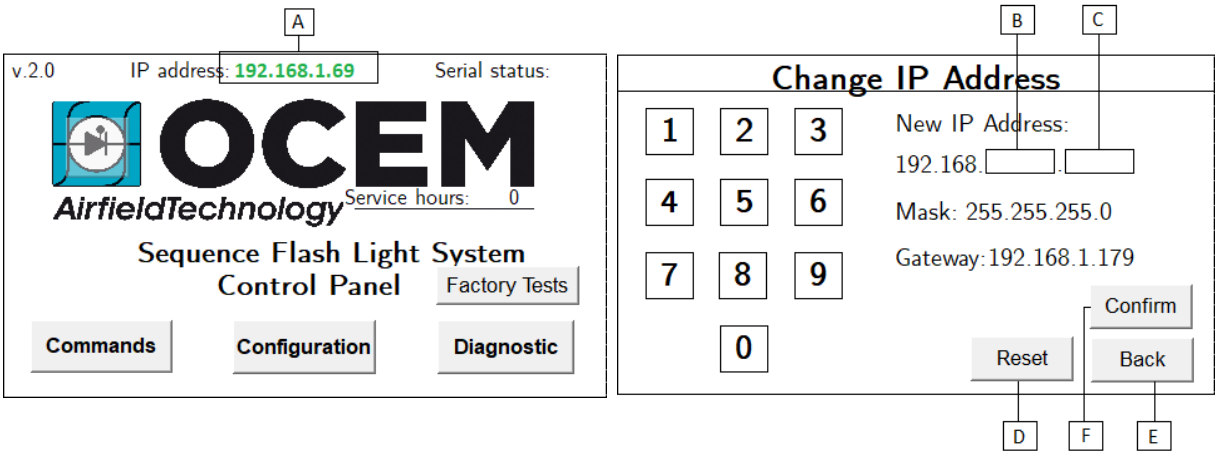

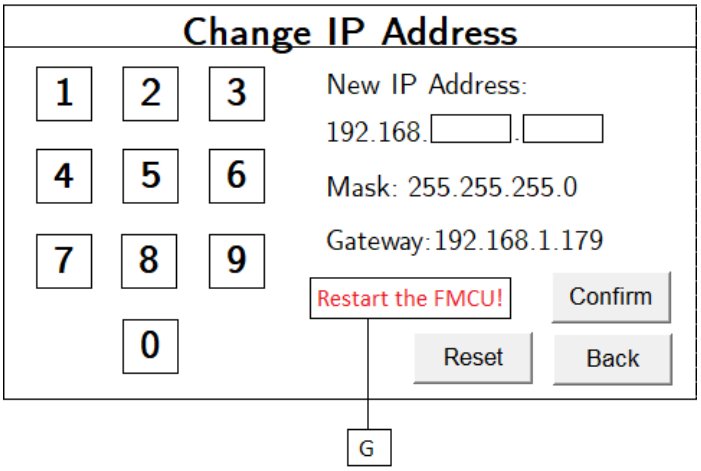

3.2.3 Configuration procedure of a new Flash Field Unit (FFU)

In order to configure a new FFU, it is required that all the other FFUs connected to the system are already configured. In other words, during the configuration procedure, only one new (i.e. not-yet-configured) FFU can be visible to the FMCU at any time.

To configure a new FFU that has been connected to the system, follow the steps described below.

1. Open the "Configuration parameters" frame from the main page of the Touch Pad by pressing the "Configuration" button as described in the paragraph 3.2.1;
2. Press the right arrow to visualize to the page for the installation of a new flash unit;
3. Select "Normal" (F) to install an FFU without activate repeater function;
4. Select "Elevated" or "Inset" (G) to install an elevated/inset FFU. Flag "RTIL" to configure the FFU as a RTIL unit;
5. Set the ID of the FFU using the arrows (H);
6. Set the flashing group of belonging of the FFU using the arrows (I).

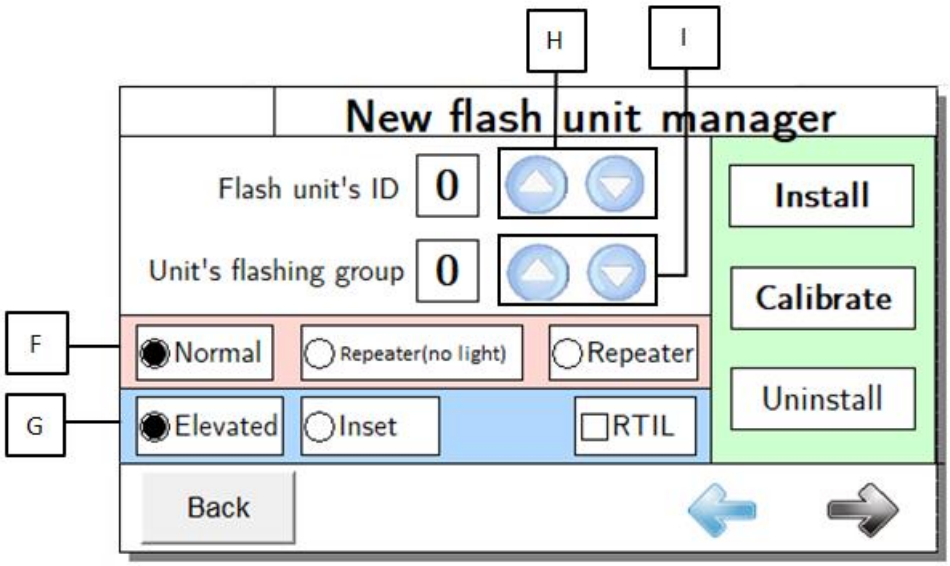

Then the button "Install" becomes green: this means that the FFU has communicated to the Master board its presence in the system with positive result.

7. Press "Install"(J);

The button "Install" becomes orange and a first acoustic signal is emitted. This indicates that configuration parameters have been sent to the FFU.
Now the button "Calibrate" becomes orange. This indicates that a calibration is ongoing. The unit starts to flash for a few seconds.
The button "Calibrate" become green and the system emits a second acoustic signal, confirming that the operation is successfully completed.

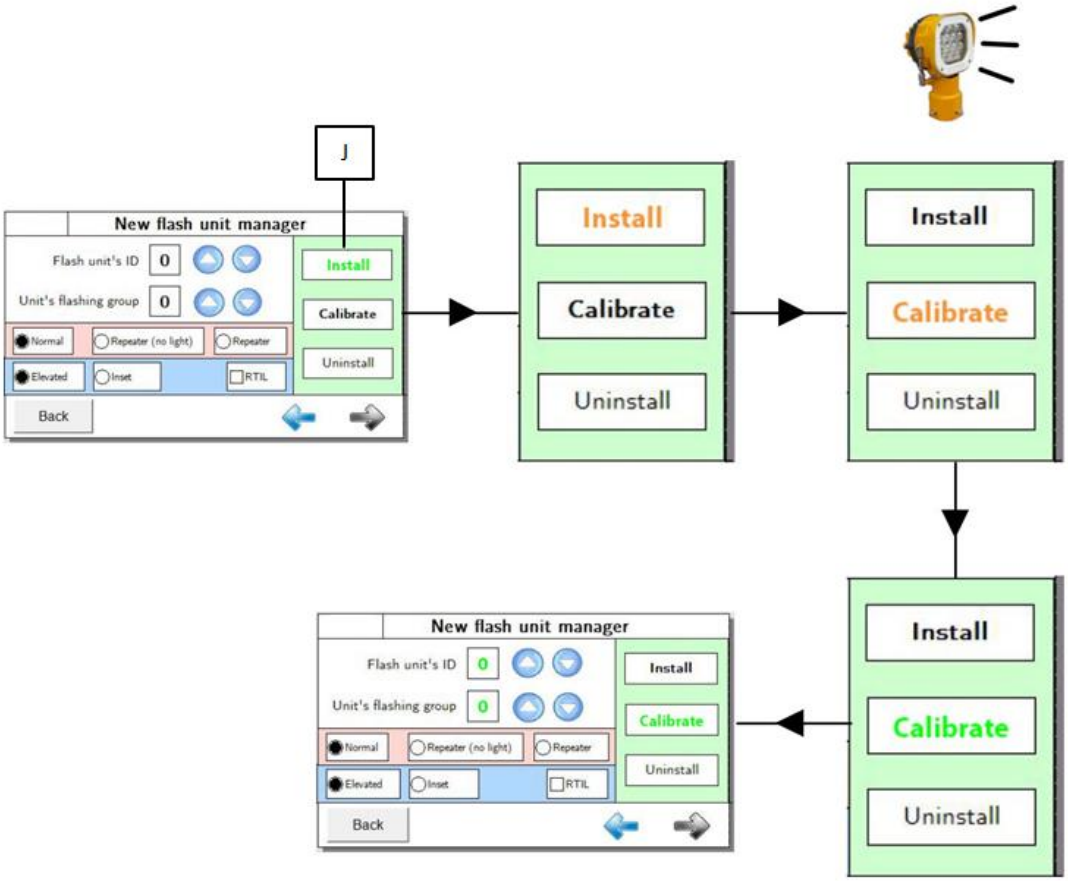

INFO	If the calibration does not terminate correctly, the button "Calibrate" becomes red and a second acoustic signal of error is emitted. This can happen for two reasons: - Some units of the system are not correctly connected to the power supply; - The FFU is not able to communicate with the Master board of the FMCU. If this happen, check the electrical connections of the units in the system and try again.

When the installation is successfully completed, "Flash unit's ID" and "Unit's flashing group" becomes green. This indicates to the user that the FFU is already installed and configured.

3.2.4 Configuration procedure of a whole new Flash System

1. Set the Polling Value (A) as described in the paragraph 3.2.1;
2. Set the number of flash unit (B) as described in the paragraph 3.2.1;
3. Set the flashing group (C) as described in the paragraph 3.2.1;
4. Set the frequency (D) as described in the paragraph 3.2.1;
5. Keeping the FMCU powered (Q1 = ON), open the circuit breaker "Q2" to power down the lights in the field;

WARNING	Switch off the circuit breaker Q2 is important to guarantee electrical safety for the operators and to avoid functional problems during the installation of the new FFU.

6. Insert the supplied service cable GEMMN0056 in the connector "J1" of the FMCU;
7. Connect the other end of the service cable to the 5 pole connector of the new FFU;
8. Press the arrow (E);
9. Install the new FFU from the Touch Pad as described in the paragraph 3.2.3;
10. Disconnect the service cable from both the ends;
11. Repeat the steps above starting from point 9 for all the FFUs that need to be configured.

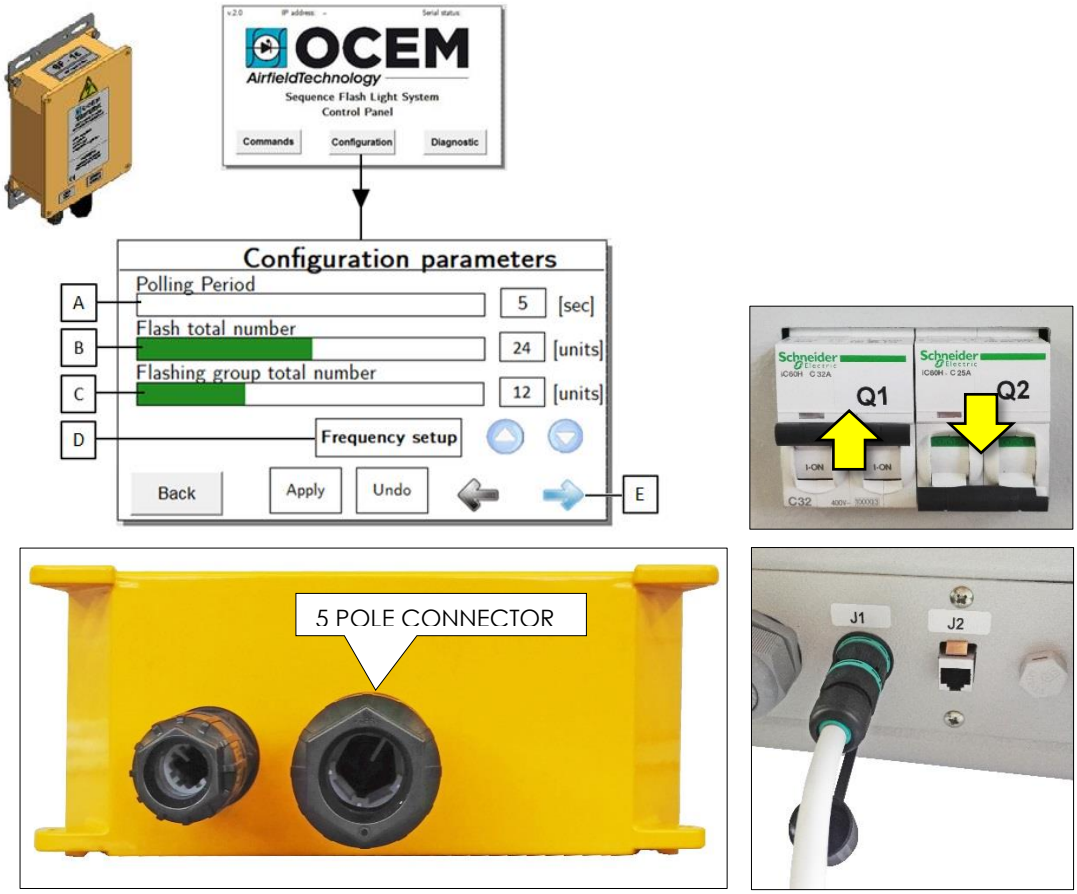

At this point, the configured FFUs can be connected to the power line in the field. Now, It's possible to:

12. Close the circuit breaker "Q2";
13. Power up the lights in the field by using commands described in the paragraph 3.3.

3.2.5 Uninstallation procedure of a Flash Field Unit (FFU)

To erase the configuration of an already installed FFU, follow the steps below:

1. Open the "Configuration parameters" frame from the main page of the Touch Pad by pressing the "Configuration" button as described in the paragraph **Errore. L'origine riferimento non è stata trovata.**;
2. Press the right arrow (E) to visualize to the page for the installation of a new flash unit;

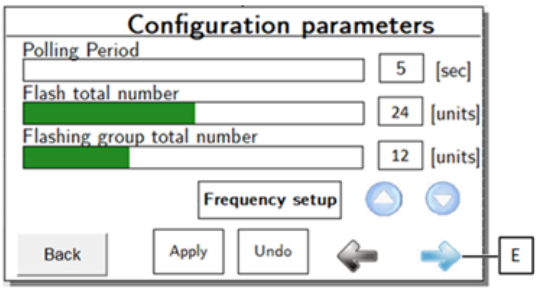

3. Select the ID of the FFU to be uninstalled (L);
4. Press the uninstall button (K).

The system emits an acoustic signal. The button "Calibrate" becomes black, as well as the "Flash unit's ID" and "Unit's flashing group" values.

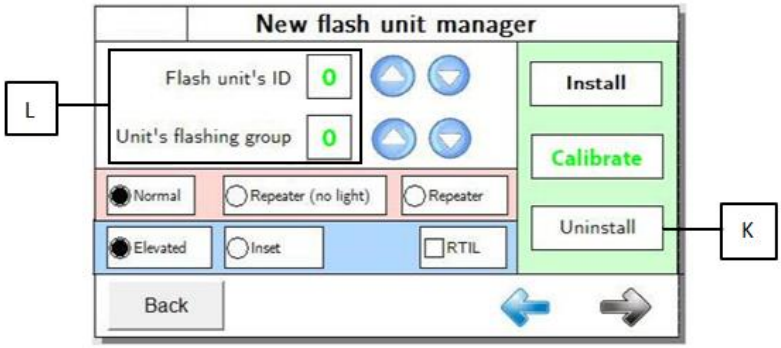

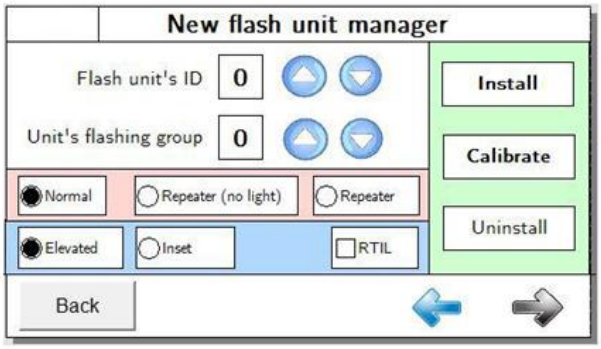

3.2.6 Commands

From the main page of the Touch Pad, press the "Commands" button to go to the relative page. The control panel of the flashing system is visualized.

It is possible to set the following parameters:

- Flash Period: flashing frequency (every second / half second);
- Flash Intensity: flashing intensity (high and compliant to the standard ICAO / normal);
- Flash Level: flashing brightness level (high – level 1 / medium – level 2 / low – level 3 / OFF).

"Back" button (4) to return to the main frame.

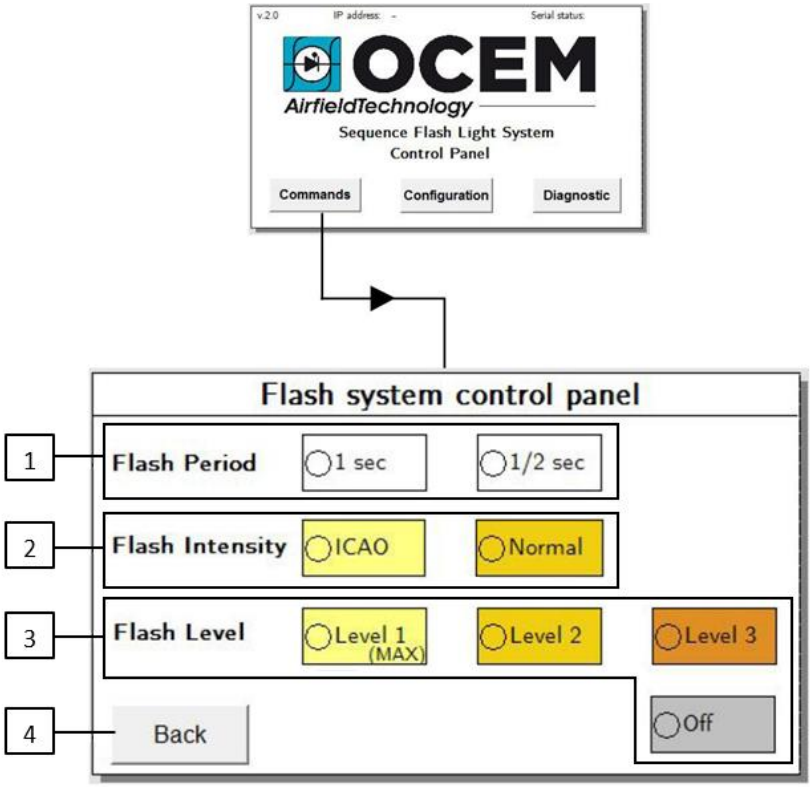

3.3 Diagnostic

From the main page of the Touch Pad, press the "Diagnostic" button to go to the corresponding page. A grid that offer a synoptic of all the units installed is visualized.

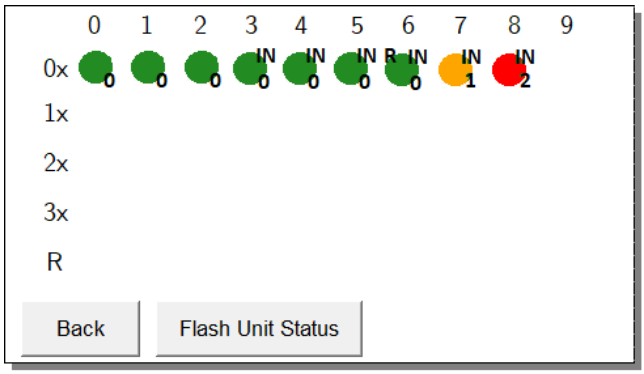

The system can assign the following specifications to every unit:

- **IN**: inset FFU;
- **R**: Repeater FFU;

If the FFU is an Elevated unit, no symbol is visualized in the grid.
For every installed unit, the corresponding group is specified with a number reported in the right-bottom side of the circle.

Moreover, for every unit, the system reports the current status, according to the colors:

- **GREEN**: FFU works properly;
- **YELLOW**: FFU reports a warning;
- **RED**: FFU reports an error;

By clicking one of the colored circles representing the installed units, it is possible to visualize the diagnostic frame of every single unit, where are reported the parameter of that unit. The same frame can be recalled by pressing the "Flash Unit Status" button on the Touch Pad and selecting the unit ID of interest.

After a few seconds, during which the system polls the FFU and the indication "Value acquisition…" (1) is visible, values previously set and other useful information for the user appears on the screen.

The information visualized are the following:

2. Flash Unit ID;
3. Flashing group of the flash unit;
4. Firmware version of the PIC (*Programmable Interrupt Controller*);
5. Firmware version of the CPU;
6. Unit status;
7. Current value (Ampere);
8. Temperature (Celsius);
9. Voltage (Volts);
10. Auxiliary Voltage (Volts);
11. Forward Voltage (Volts);

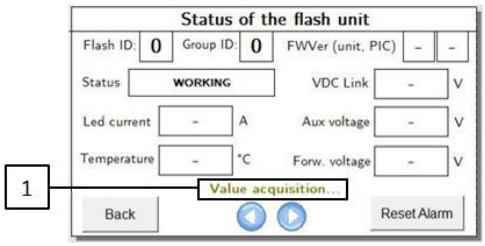

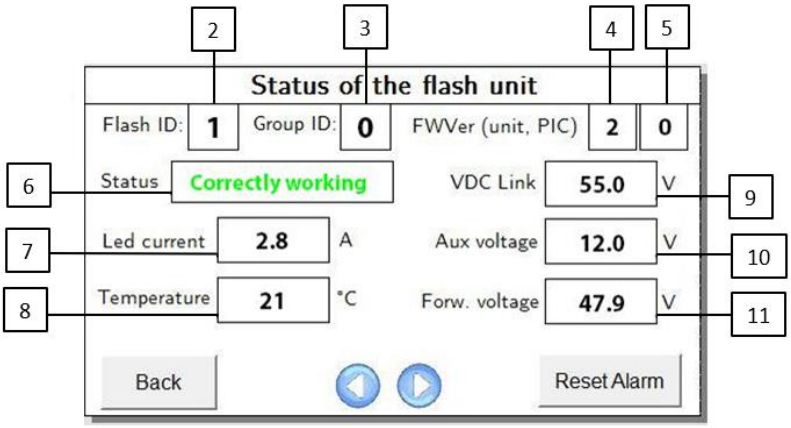

Using the arrows (12) is possible to go directly from the status frame of one FFU to another one.

In the case the voice "Status" (6) reports a condition of error, it's necessary:

- Resolve the problem of the unit restoring the condition of normal operation (the status visualized will be still alarmed)
- Press the button "Reset Alarm" (13); status becomes "Correctly working";

"Back" button (14) to return to the frame of the synoptic of the FFUs.

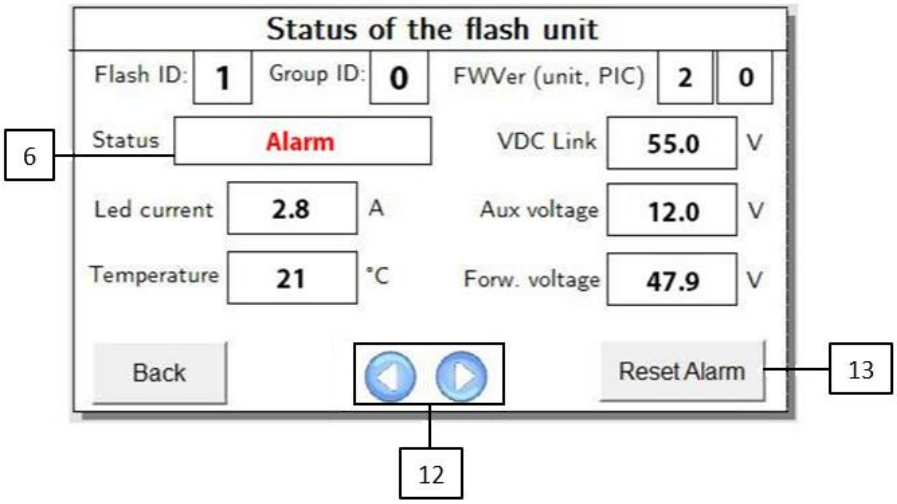

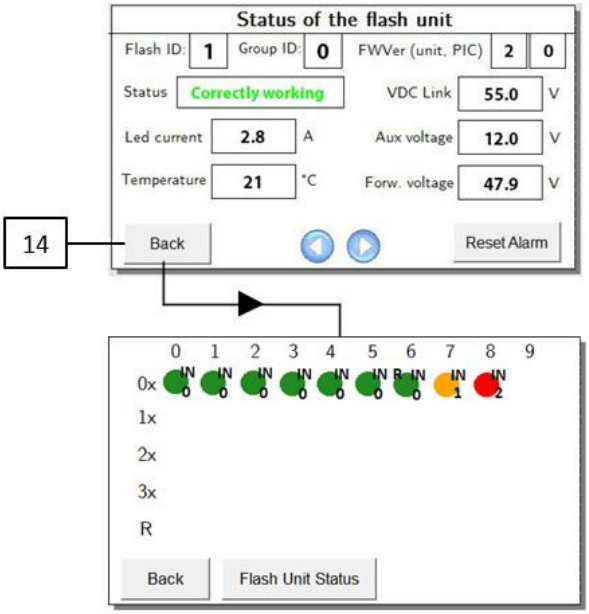

4 MAINTENANCE

WARNING	**BEFORE ANY MAINTENANCE INTERVENTION, MAKE SURE THE POWER SUPPLY BE SWITCHED OFF. DO NOT OPERATE ON LIVE PARTS!**

In order to ensure maximum Flashing System life, the installed units should be subject to a maintenance program in accordance with the following instructions and taking the Airport Service Manual ICAO - Part 9 - Airport Maintenance Practices or FAA AC 150 5340-30 as a reference.

4.1 Flash Master Control Unit (FMCU)

QUALIFIED TECHNICIAN	**Because dangerous voltages are present inside the FMCU, all interventions must be carried out by skilled personnel in confidence with 230VAC circuits; the personnel must be well informed of the reanimation techniques, widely described on first aid handbooks.**

DISCONNECT	**Before any inspection or maintenance intervention, be sure to have switched-off the FMCU, opened the input circuit breaker Q1 and removed the power supply to the FMCU (by opening the circuit breaker/switch provided on the distribution board of the main power supply line energizing the FMCU).**

MANDATORY	**Wait at least 5 minutes to allow a complete discharge of the power capacitors installed on the Input Filter Board.**

4.1.1 Periodical maintenance

INTERVAL	MAINTENANCE WORK
Every six months	Check the tight connections of the input and output power cables, respectively to the terminal board X1 and X2. Check the unit grounding connections to the grounding terminal of terminal board X1 e X2.
	Check the mechanical fixation of the components and the electrical connections.
	Check the main circuit breakers Q1 e Q2; in case of dusty place, clean the equipment by means of compressed air.
	Check the auxiliary fuses F1 ÷ F5
	Check the proper tightening of the wires connected to the magnetic component "L1".
	Check the "vent" aeration provided on the bottom of Panel Board is not obstructed, in order to grant the proper cooling; if necessary clean by means of compressed air

4.1.2 Master board replacement

In case of substitution of a damaged Master board (F316), follow the steps described below:

- Power down the system
- Open the double door (external with glass and internal with the touch pad);
- Disconnect the electrical connections of the board:
    - (1) J3 = PE
    - (2) J1 = 11
    - (3) J2 = 12
    - (4)
- Exert a pressure on the pins that fix the board on the FMCU cabinet (5);
- Remove the board;
- Replace the damaged board with the new one;
- Restore the electrical connections;
- Close and power up the FMCU.

The next step consists in restoring the configuration of the system and saving it in the new master board. This procedure can be performed through a dedicated application (*Flash Remote Configurator*) provided by OCEM.

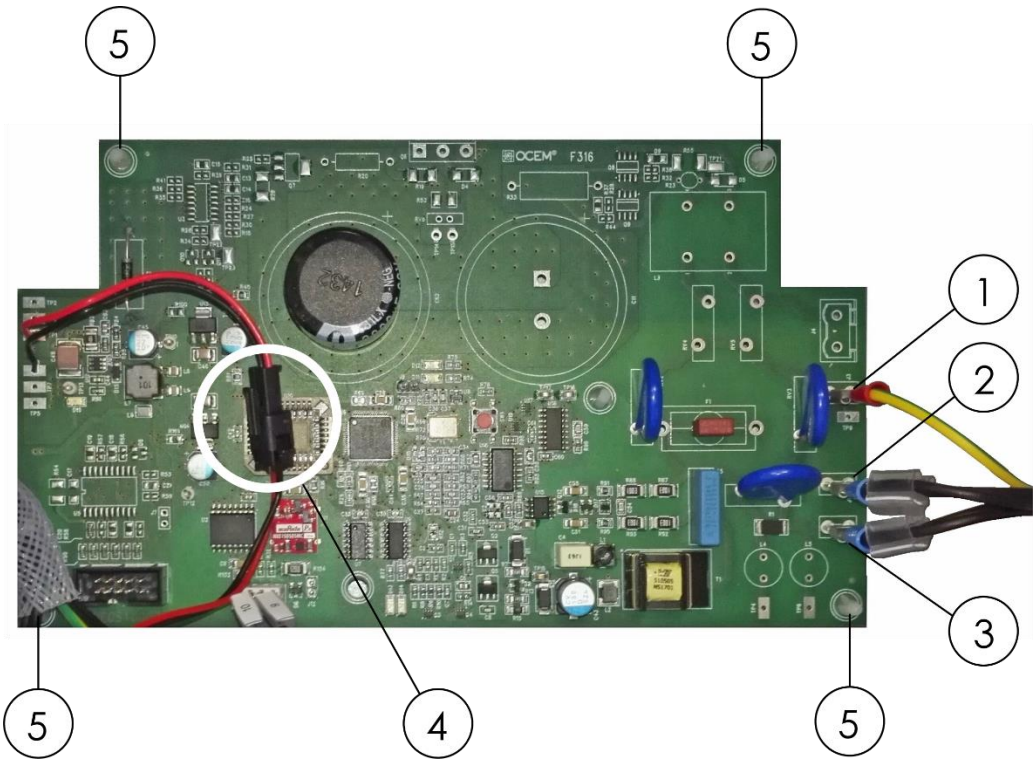

Figure 5. Master board replacement

4.1.3 Touch Pad Replacement

WARNING	Every time the operator use the Touch Pad, he have to wear the wrist-strap against electrical discharge provided in the FMCU cabinet.

If the Touch Pad need a replacement because it does not work properly or it is damaged, follow the steps described below:

- Power down the system;
- Open the double front door (external with glass and internal front door with Touch Pad);
- Disconnect physically the supply and Ethernet cables;
- Unlock the eight pins in the rear of the Touch Pad from the fixed frame on the internal front door (it may be used a screwdriver);
- Remove the damaged Touch Pad;
- Fix the new Touch Pad provided by OCEM to the frame;
- Restore the electrical connections (supply and Ethernet cables);
- Close and power up the FMCU.

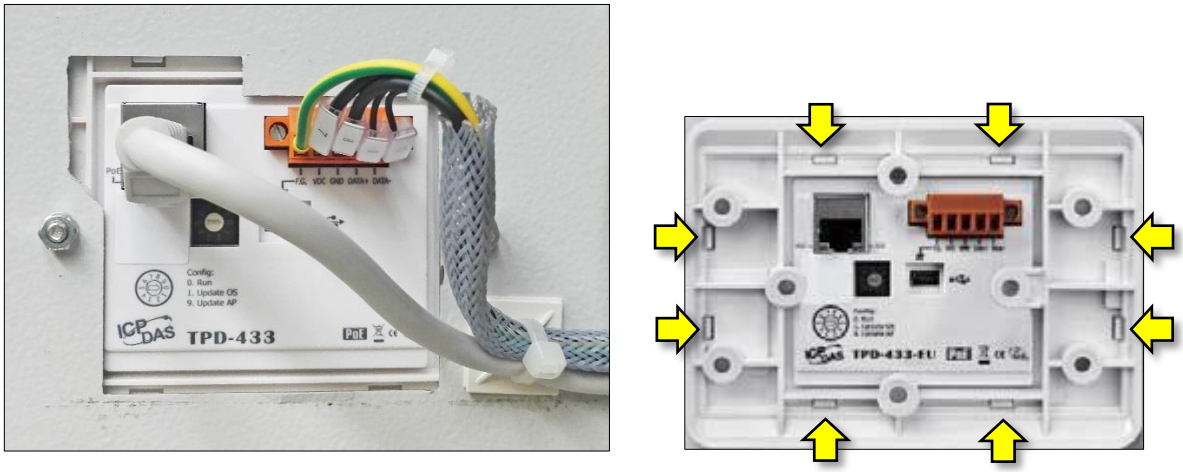

Figure 6. Touch Pad replacement

4.1.4 Troubleshooting

PROBLEM	POSSIBLE CAUSE	SOLUTION
No led or display indications on the internal front door (P-ok & P-on)	Problem with the power supply to the board	Check: - the presence of the input power supply (terminal X1); - the input circuit breaker Q1 be in ON state; - the fuses F1-2 and F3 are not blown (see figure xx); - the cables connection on the P-ok and/or P-on LED lights.
No led indications on the T1 and/or T2 Auxiliary power supply	Problem with the power supply to the cards.	See the above paragraph
	Fault of the T1 and/or T2 Auxiliary power supply.	Replace the Auxiliary power supply (see the electrical connection PAFLC0001.0 in appendix).

4.2 Flash Field Unit (FFU)

QUALIFIED TECHNICIAN	Because dangerous voltages are present, all the interventions must be carried out by skilled personnel, well informed about electrical hazards.

WARNING	Every time the operator uses the Touch Pad, he/she has to wear the wrist-strap against possible electrostatic discharges.

4.2.1 FFU Replacement

In case of substitution of a damaged FFU, follow the steps described below:

- From the Touch Pad, take note of the ID and group flash number of the damaged FFU, then uninstall the damaged FFU (see par. 3.2.5);
- Keeping the FMCU powered (Q1 = ON), open the circuit breaker "Q2" to power down the lights in the field;

DISCONNECT	Switch off the circuit breaker Q2 is important to guarantee electrical safety for the operators and to avoid functional problems during the installation of the new FFU.

INFO	After switching OFF the circuit breaker Q2, the diagnostic page of the Touch Pad may temporary report a series of not responding FFUs (in fault). In general, this is not a problem, as all the alarms will disappear after switching ON again the circuit breaker Q2.

- Insert the supplied service cable GEMMN0056 in the connector "J1" of the FMCU;

INFO	For the FFU replacement, the new FFU must be clean, no ID or group defined.

- Connect the other end of the service cable to the 5 pole connector of the new FFU (see 30);
- Install the new FFU from the Touch Pad with the same ID and group of the damaged unit (see par. 3.2.3);
- Write the new ID and group info on the label of new FFU with permanent marker;
- Disconnect the service cable GEMMN0056 from both the ends (see 30);
- In field, remove the damaged FFU by disconnecting the power cables;

- Install the new configured FFU and restore the electric connections;
- Close the circuit breaker "Q2" to power up the lights in the field.

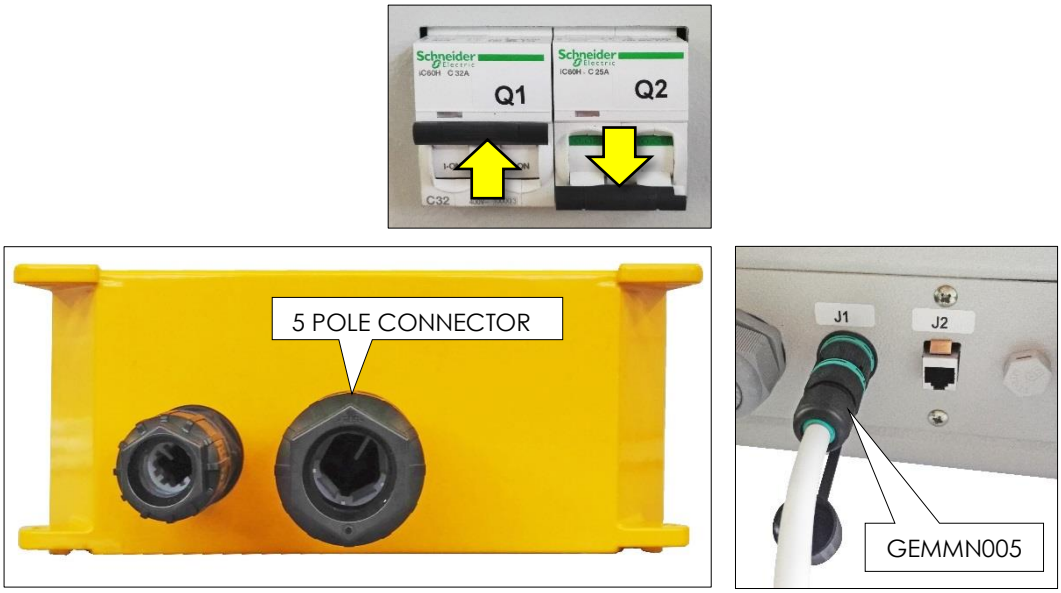

Figure 7. FFU replacement

4.3 Elevated light fixture LEFL

4.3.1 Periodical Checks

INTERVAL	CHECK DETAILS
Monthly	Cleaning of the transparent front protections
	Correct setting of the lights
Annual	Stability of the civil works
	Stability and assembly of lights
	Electrical connections and insulation degree
	Luminous efficiency of luminous sources
	Condition of all the gaskets
Unscheduled	After unusual atmospheric precipitation, check the light condition and remove any luminous beam obstructions

SNOWPLOW OPERATIONS

Snowplow operators should exercise extra care not to strike the light fixtures with snowplow blades. After snow removal operations, inspect all light fixtures to locate and replace, if necessary, any damaged light assemblies.
Recommended snow removal techniques are described in Airport Service Manual ICAO - Part 9 - Airport Maintenance Practices or FAA AC 150/5200-30.

4.3.2 Light fixture replacement

- releasing the locking screws of the support with vertical aiming adjusting device and unscrewing the nut of the bulkhead connector; (fig. 17)
- remove the light unit from the breakable coupling, from the supporting pole or from the frangible-lowering mast; (fig. 17)
- Remove the external grounding wiring too, when provided. In this way, the existing electrical connections can be reused.
- replace the light unit, reconditioning the electrical connections
- Aiming the fixture following the instructions of the specific manuals (OCEM UT-MT-0892 INSTALLATION MANUAL).

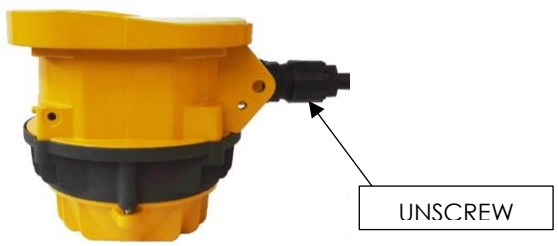

Figure 8. LEFL Light fixture replacement

4.3.3 Electronic board replacement

To remove the electronic board (F311) operate as follows:

- unscrew in the rear side the two captive screws;
- disconnect the power supply and grounding wires and the LED module connector;
- replace the faulty electronic board with a new equivalent one;
- reconnect the power supply and grounding wires;
- screw the two captive screws.

NOTE: no new adjustments are necessary.

Figure 9. LEFL Electronic Board replacement

4.3.4 LED module replacement

NOTE: it is advisable to perform all the operation in a maintenance center.

Remove the light fixture as described in par 4.3.2, then:

- Unscrew the four captive screw in the front of the light fixture and remove the transparent protection with its holder plate;
- unscrew the two pairs of M4 screws which lock both the two lens arrays and the LED module, and then the central screw;
- disconnect the LED module power supply wires;
- replace the faulty LED module and reconnect the power supply wires;
- set the LED module by means of the central screw (don't tighten the screw);
- set the two lens arrays by means of the four M4 screws;
- Tight the central screw.

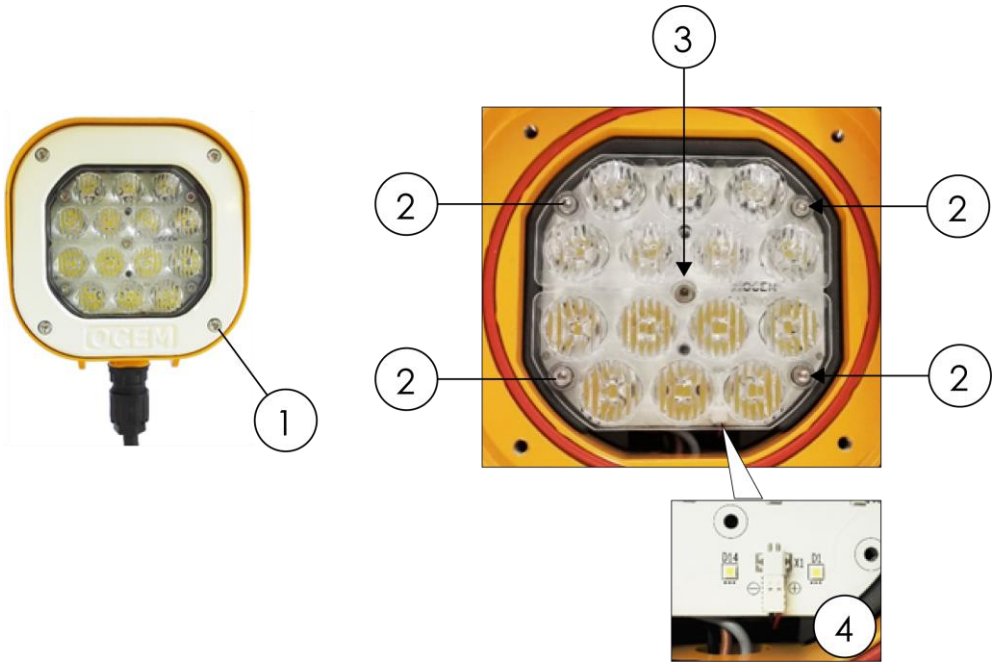

Figure 10. LEFL Led module replacement

4.3.5 Cable lead with plug replacement

DANGER	The cable can be wired only when the fixture is **not powered!** The bulkhead connector can be reused for a maximum of ten times using the same conductor size.

Replacing the cable lead needs a complete removal of the light fixture, including the faulty cable lead.

NOTE: it is advisable to perform all the operation in a maintenance center.

TWO POLE CABLE

- Unscrew the external nut of the bulkhead connector from the internal body, provided to fasten the wires;
- Extract the bulkhead connector and remove the old cable;

- Cut the new cable sheath for a length of approx. 40 mm;

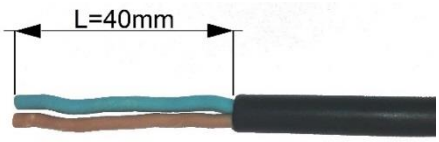

- Insert the cable through the nut and then the gasket of the bulkhead connector body;

- Screw, only one turn, the nut to the body. Fit-in the wires of the cable lead into the terminals **1** and **2**;
- Cut the wires, flush with the body of the bulkhead connector;

Insert the bulkhead connector nut-body assembly through the special support with vertical aiming adjusting device;

- Tighten the nut-body assembly to the fixed section of the bulkhead connector mounted on the fixture body, in this way providing the electrical connection (tightening torque: 5 Nm).
- Use special tubular wrench 22 mm for bulkhead connector tightening (P/N. 798.0006);

- Assembly the support with vertical aiming adjusting device to the body by means of the two screws with washer, which act as fulcrum; fasten the vertical aiming adjusting device to the body by means the bush with screw before removed. Tighten the two screws with a torque of 5 Nm and the bush screw with a torque of 3 Nm;

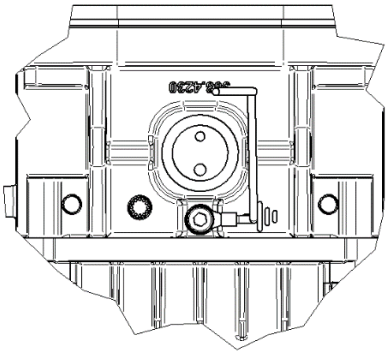

- Provide the grounding wiring by means of the suitable external screw, placed at the bottom of the body.

TWO SINGLE – POLE CABLES

- unscrew the nut by the internal body locking the wires, make free them and removed the faulty cable lead;

- insert the new cable leads with plug and the grounding wire through the bulkhead connector nut, and the through the grommet with three holes. Pull the wires for approx. 40 mm in respect to the grommet;

- place the grommet complete with wires inside the bulkhead connector internal body;

- screw, only one turn, the nut to the body. Fit-in the wires of the cable lead into the terminals **1** and **2**;
- cut the wires, flush with the body of the bulkhead cone;
-

- tighten the nut-body assembly to the fixed section of the bulkhead connector mounted on the fixture body, in this way providing the electrical connection (tightening torque: 5 Nm).

4.3.6 LEFL Troubleshooting

PROBLEM	POSSIBLE CAUSE	SOLUTION
Distorted light beam output	Broken or damaged lens	Replace lens
Weak light output	Primary loop with partial short circuit	Check cable assembly
	Defect in the isolation transformer	Replace transformer
	More than 25% LED in short circuit (only without the monitoring option)	Replace the LEDs board
	Wrong power PCB installed	Check parts list and install the correct PCB
Luminous source not working	LEDs defective	Replace the LEDs board
	Power PCB defective	Replace the Power PCB
	No connection of primary circuit	Check transformer output current with A-meter
	Defective isolation transformer or secondary wiring	Check power line between the light fixture and the transformer, including connectors
	Monitoring device locked (only if this option)	Unlocked monitoring device
Water or moisture inside the fixture	Lens gasket	Replace the gasket
	Pinched fixture power cables	Replace fixture leads

4.4 Inset light fixture LIFL

4.4.1 Periodical Checks

INTERVAL	CHECK DETAILS
Weekly	Cleaning of the prisms and the light output channel of runway fixtures
Bi-monthly	Cleaning of the prisms and the light output channel of taxiway fixtures
Annual	Check for burned-out led
Unscheduled	Check for moisture inside the fixture
	STABILITY OF THE CIVIL WORKS OF RUNWAY FIXTURES
	Check for water in base
	ELECTRICAL CONNECTIONS AND INSULATION DEGREE
	LEAKAGE TEST
	Condition of all gaskets
	Check torque of mounting bolts after a month of their first installation

SNOWPLOW OPERATIONS

Whenever snowplows must traverse in-pavement light fixtures, they should be either travelling at less than **10 km/h** or have the blades lifted clear of the fixtures.

WARNING	Do not strike the light fixture with snowplow blades.

4.4.2 Removing and opening the light unit from the base

REMOVING THE LIGHT FIXTURE

- Switch off the light unit alimentation and unscrew the six locking screws complete with washers;
- Raise the fixture from the base by using the two lifting tools (P/N 332.4140 or 332.4230) inserted in the suitable slots provided on the dome. As an alternative, two screwdrivers can be used;
- Disconnect the fixture plug/s and grounding cable from those inside the shallow base.

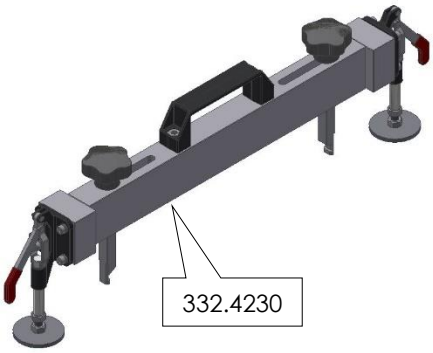

OPENING THE LIGHT FIXTURE

- Bring the internal light fixture pressure to the atmospheric pressure by unscrew the leak valve cap and push the valve central pin;
- Open the fixture by unscrewing the six locking screws HSFH M5x10, placed in the bottom side of the dome.

WARNING	Every time the fixture is opened, inspect the following parts and **replace** them if necessary: - prism, if it is dirty or damaged (see par. 4.4.3) - prism gasket, check the integrity (see par. 4.4.3) - cable lead with plug (see par.4.4.5) - two O-Ring between dome and lower cover;

CLOSING THE LIGHT FIXTURE

- Mount the lower cover on the dome and fasten it by means the six screws HSFH M5x10
- One drop of anaerobic adhesive lower type (e.g. LOXEAL 24-18) should be applied to the screws before installation.

LEAKAGE TEST

- Connect an external air pressure line to the valve provided on the lower cover;
- Bring internal pressure to 1.38kPa;
- Immerge the assembly under water;
- If there is no air loss then test is passed successfully, otherwise the pressure valve need to be replaced (see par. 4.4.6).

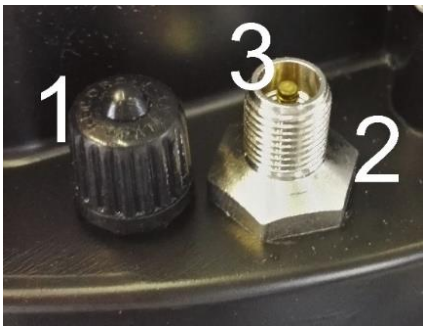

Figure 11. Lower Cover with Pressure Valve

REINSTALLING THE LIGHT FIXTURE

WARNING	Every time the fixture is removed from the base replace the following items with a new ones making sure that are right placed in the relevant groove: - the six special seal lock washers; - O-Ring around the dome (4); - O-Ring between fixture and shallow base (7); - The fixture is ready to be field installed.

1. Dome
2. O-Ring between dome and lower cover
3. O-Ring between dome and lower cover
4. O-Ring around the dome
5. Lower Cover
6. 12" Shallow base
7. O-Ring between fixture and 12" Shallow base

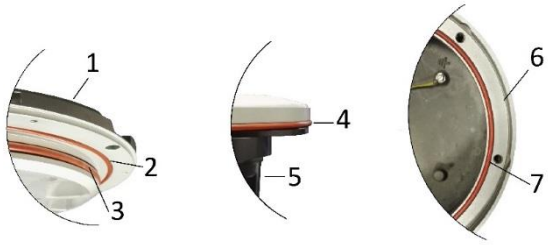

TIGHTENING TORQUE	
lower cover HSCS M5x10	2.5 Nm
fixture locking screw	35 Nm (for shallow base)
	35 Nm (for L-868 base, size B)

4.4.3 Prism Cleaning and replacement

CLEANING

Outside Cleaning:

- Clean the prisms surface with non-abrasive glass product (NO paint thinner). Removing or opening the fixture is not necessary.

Inside Cleaning:

NOTE: Prisms inside cleaning usually is not necessary because fixture is watertight.

- Remove the fixture from the base and open it (par 4.4.2)
- clean the prisms surfaces (**Errore. L'origine riferimento non è stata trovata.** - n°1) with non-abrasive glass product (NO paint thinner)
- dry them carefully
- Reassembly the light unit following instructions of par. 4.4.2

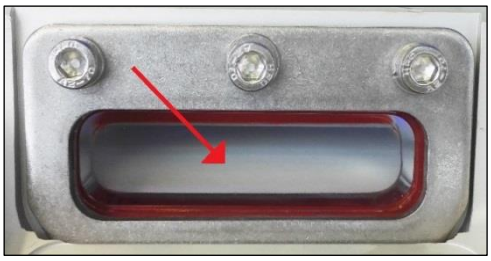

REPLACEMENT

WARNING	In case the prism is damaged, it must be replaced. It is highly recommended to do a complete overhaul of the fixture. Contact OCEM - ENERGY TECHNOLOGY for any suggestion.

Remove the fixture from the base and open it par. 4.4.2.

- Clean out possible pieces of the old prism and all accumulated debris from the inside;
- Unscrew the two screws HSCS M5x12 (6) and remove the mounting plate (5);
- Remove the old prism and the gasket; carefully clean the prism seat by scraping and taking care not to damage the relevant walls;
- Place a new gasket (2) in the prism cavity on the dome;
- Position and press by hand the prism (3) in the relevant seat and place a new gasket in the backside of the prism (4);
- Fasten the mounting plate (5) with the two relevant screws HSCS M5x12 (6); tightening torque is 2.5 Nm.

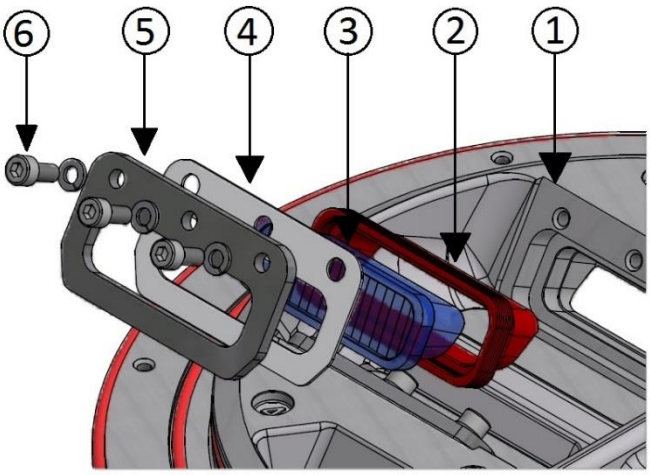

Figure 12. Prism replacement components

4.4.4 LED module replacement

Remove the fixture from the base and open it following instructions of par. 4.4.2 and proceed as follow:

- disconnect the power supply connector from the LED module (4);
- remove the LED module (3) and the relevant reflector (1) from the mounting plate unscrewing the two screw HSCS M3x12;
- replace the LED module it with a new one;
- place the thermal interface (5) under the LED module and right-positioned;
- place the Kapton insulating sheet (2) over the LED board in the right position;
- fasten the LED module and the relevant reflector with a tightening torque of 0.6 Nm;
- reconnect the power supply connector (4) to the LED module.

Reassembly the fixture following instructions of par. 4.4.2.

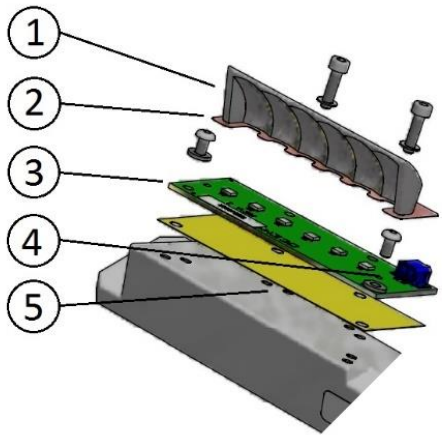

Figure 13. LED Module Replacement components

4.4.5 Cable lead with plug replacement

Remove the fixture from the base and open it following instructions of par. 4.4.2.

- Inside the lower cover, disconnect the pair of wires from the electronics and cut the female faston terminal;
- Unscrew the gland and pull out the cable lead with gland gasket;
- Insert on the new power supply cable lead with plug (1), the new gland nut (2) so that the available length of cables outside the fixture is 0.46 m when re-assembled;
- Pull both cables through the suitable hole provided in the bottom of the lower cover;
- Cut the new cable sheath for the remaining length;
- Splice each cable for a length of approx. 7 mm;
- Clamp the female faston terminal to the cable (3);
- Tighten the gland nut at 6Nm torque;
- Restore internally the electrical connections.

Close the light fixture following instructions of par. 4.4.2.

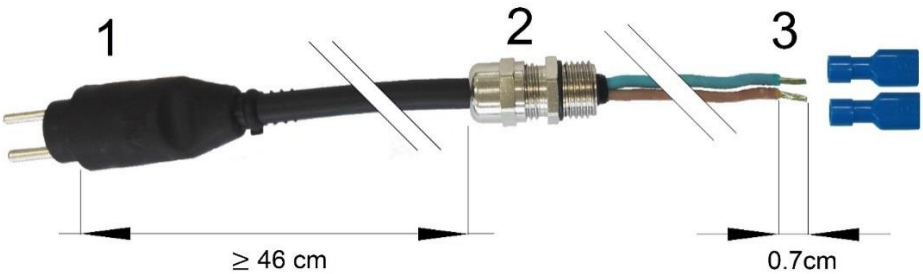

4.4.6 Pressure valve replacement

WARNING	In case of leakage between the valve and the lower cover, check the tightening of the valve body to the lower cover from the outside of the fixture.

In case the pressure valve needs replacing, operate as follows:

- Unscrew the valve body with gasket from the outside of the lower cover by clamping the hexagonal end section of the valve body.
- Screw the new valve on the lower cover; tightening torque is 0.35 Nm.

Reassembly the light unit following instructions of par. 4.4.2.

4.4.7 LIFL Troubleshooting

PROBLEM	POSSIBLE CAUSE	SOLUTION
Distorted light beam output	Broken or damaged prism	Replace prism
	Wrong prism installed	CHECK PARTS LIST AND INSTALL THE CORRECT PRISM
Weak light output	Dirty prism or dome	Clean the light fixture
	One LED of the luminous source damaged in short circuit (only without the monitoring option)	Replace the LEDs board
	Wrong electronic interface	Check parts list and install the correct electronic
Luminous source not working	LEDS DEFECTIVE	Replace the LEDs board
	Moisture inside the fixture	Execute leakage test and replace damaged components. Clean and dry the inside area of the fixture
Water or moisture inside the fixture	Prism gasket, O-rings between dome and lower cover	Replace all gasket and execute leakage test
	Pinched fixture power cables	Replace fixture leads

5 SPARE PARTS

GROUP	CODE	DESCRIPTION
Flash Master Control Unit (FMCU)	RISLF0002	Master Board (F316)
	RISLF0003	Fuses kit
	RISLF0004	Input Filter Board (F340)
	RISLF0005	Touch Pad
	RISLF0006	Auxiliary power supply
	RISLF0007	Circuit breaker Q1
	RISLF0008	Circuit breaker Q2
Flash Field Unit (FFU)	RISLF0001	Flash Field Unit cabinet
LIFL	RISLF0009	Assembled dome
	RISLF0010	Gasket Kit
	RISLF0011	Prisms assembly
	RISLF0012	Led module kit (F312)
	RISLF0013	Electronic board Kit (F311)
	RISLF0014	Kit power supply cable with plug
LEFL	RISLF0015	Led module Kit (F313)
	RISLF0016	Electronic board Kit (F311)
	RISLF0017	Transparent front protection
	RISLF0018	Gasket Kit

6 APPENDIX

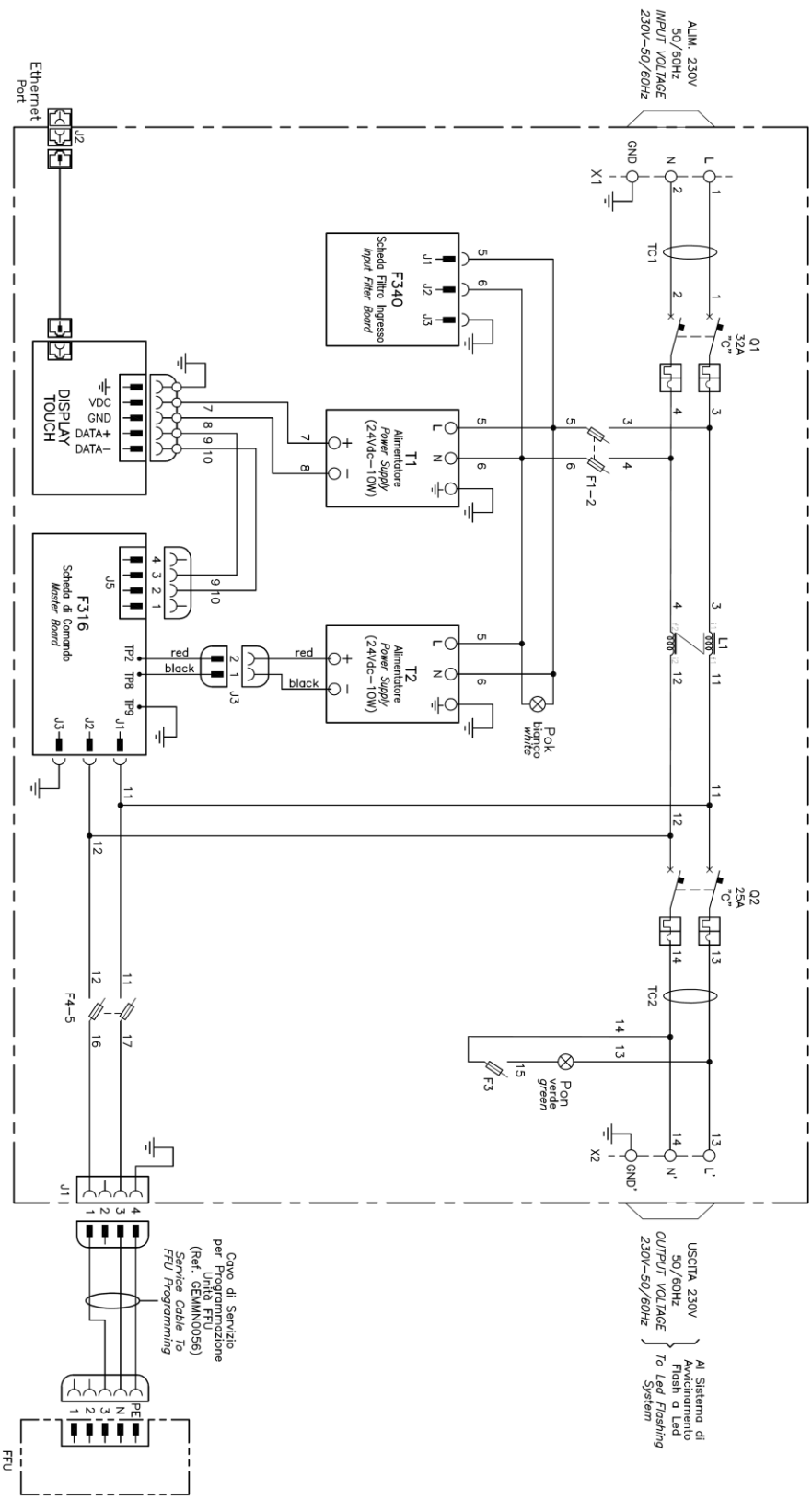

Figure 14. Electrical diagram (PAFLC0001.0)